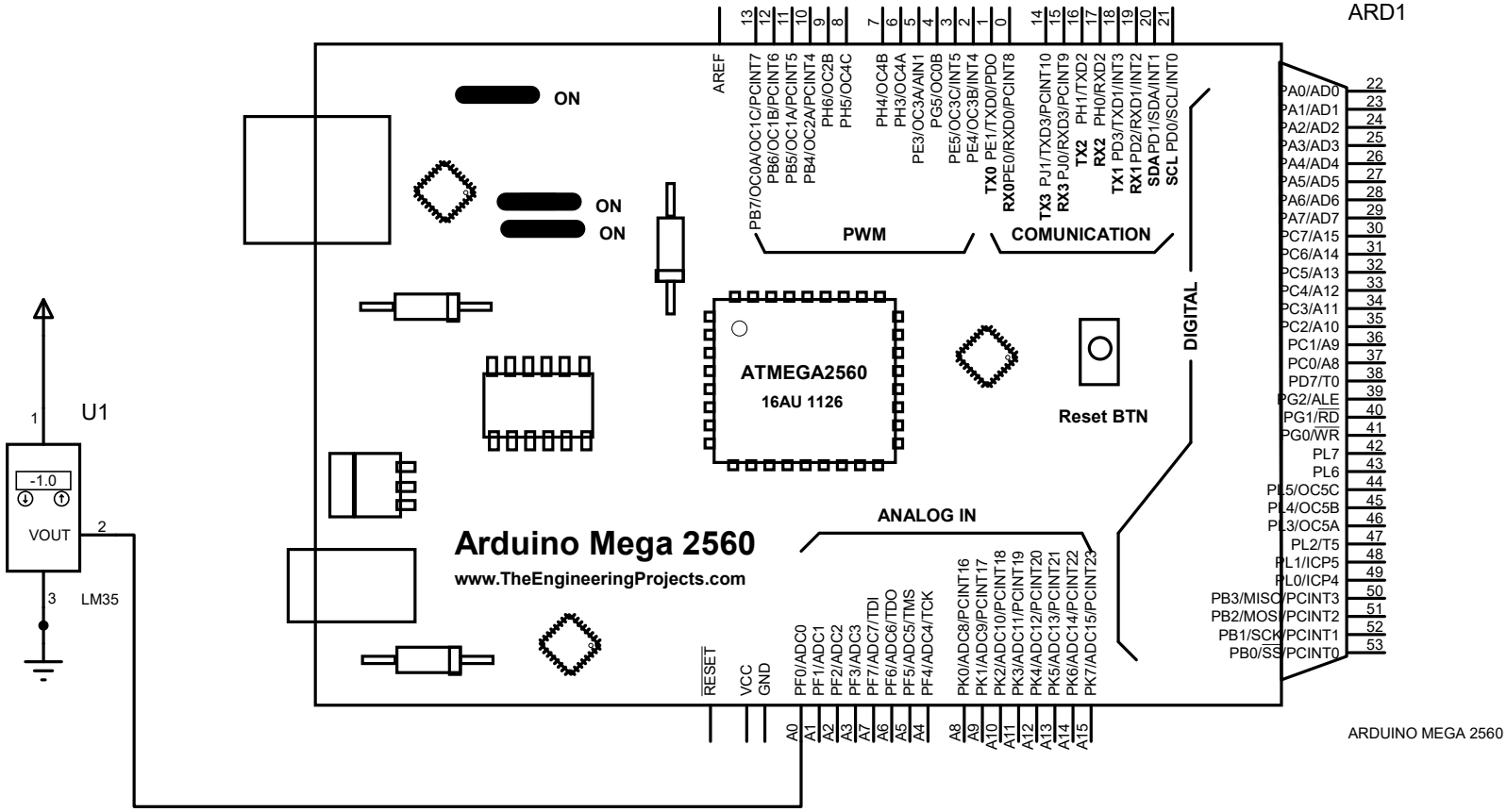
ARD1
ON
ON
ON
AREF
PB7/OC0A/OC1C/PCINT7
PB6/OC1B/PCINT6
PB5/OC1A/PCINT5
PB4/OC2A/PCINT4
PH6/OC2B
PH5/OC4C
PH4/OC4B
PH3/OC4A
PE3/OC3A/AIN1
PG5/OC0B
PE5/OC3C/INT5
PE4/OC3B/INT4
TX0 PE1/TXD0/PDO
RX0PE0/RXD0/PCINT8
TX3 PJ1/TXD3/PCINT10
RX3 PJ0/RXD3/PCINT9
TX2 PH1/TXD2
RX2 PH0/RXD2
TX1 PD3/TXD1/INT3
RX1 PD2/RXD1/INT2
SDA PD1/SDA/INT1
SCL PD0/SCL/INT0
PWM
COMUNICATION
DIGITAL
ATMEGA2560
16AU 1126
Reset BTN
ANALOG IN
Arduino Mega 2560
www.TheEngineeringProjects.com
RESET
VCC
GND
PF0/ADC0
PF1/ADC1
PF2/ADC2
PF3/ADC3
PF7/ADC7/TDI
PF6/ADC6/TDO
PF5/ADC5/TMS
PF4/ADC4/TCK
PK0/ADC8/PCINT16
PK1/ADC9/PCINT17
PK2/ADC10/PCINT18
PK3/ADC11/PCINT19
PK4/ADC12/PCINT20
PK5/ADC13/PCINT21
PK6/ADC14/PCINT22
PK7/ADC15/PCINT23
A0 A1 A2 A3 A7 A6 A5 A4 A8 A9 A10 A11 A12 A13 A14 A15
PA0/AD0 22
PA1/AD1 23
PA2/AD2 24
PA3/AD3 25
PA4/AD4 26
PA5/AD5 27
PA6/AD6 28
PA7/AD7 29
PC7/A15 30
PC6/A14 31
PC5/A13 32
PC4/A12 33
PC3/A11 34
PC2/A10 35
PC1/A9 36
PC0/A8 37
PD7/T0 38
PG2/ALE 39
PG1/RD 40
PG0/WR 41
PL7 42
PL6 43
PL5/OC5C 44
PL4/OC5B 45
PL3/OC5A 46
PL2/T5 47
PL1/ICP5 48
PL0/ICP4 49
PB3/MISO/PCINT3 50
PB2/MOSI/PCINT2 51
PB1/SCK/PCINT1 52
PB0/SS/PCINT0 53
ARDUINO MEGA 2560
U1
1
-1.0
VOUT
2
3
LM35